kamoer®

Good looking appearance · Wide range of applications

KCM Peristaltic pump

High precision · Smooth water output · Stepper motor

THE FIRST

Four advantages · All in one

Kamoer focuses on the production of micro pumps, accurate and reliable

Simple structure

Fine and high quality

Traffic size can be selected

Precise and reliable

Application range

Solve problems for you in various occasions

Medical experiment

Filling-packing

Science laboratory

Food and Beverage

Stepper motor

Control precision
More accurate liquid addition

Easy maintenance

Simple structure

Easy maintenance and quick change of pump tube

Adjustable number of rotors

3 Rotor · 6 Rotor · A variety of tube types available

Meet different flow life requirements

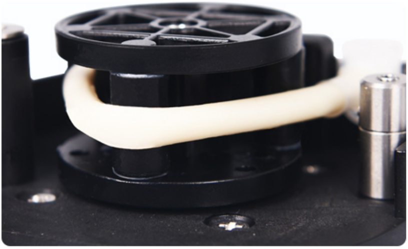

3 Rotor

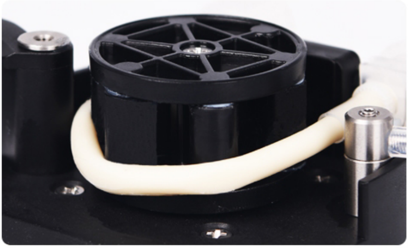

6 Rotor

Look good

Good craftsmanship from the details

kamoer
kamoer

Product information

Always work hard to study the peristaltic pump that you can rest assured

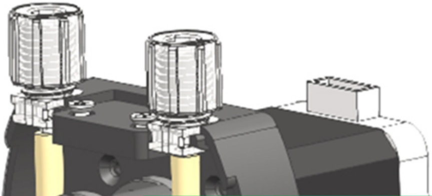

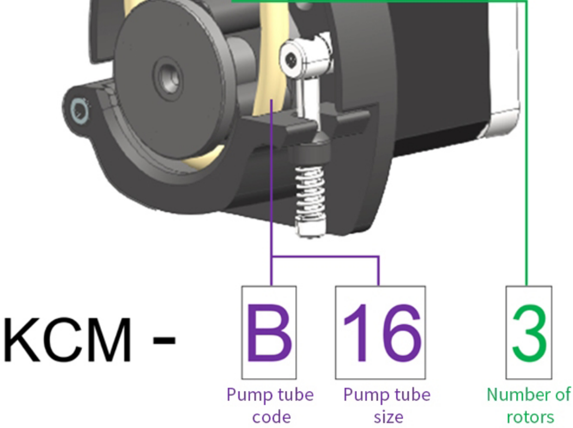

KCM- S 16 8-ODMB
↑

1. Tube selection

Tube	Materials	Features	Tubing life
S	Silicon	Good adsorption,low temperature resistance,low deposition. Chemical corrosion resistance can be decreased with the rise of temperature.Suitable for transporting weak corrosive liquid(10%). working temperature range from -60℃-200℃	⩾200h
B	PharMed®BPT	Non-cytotoxic and non- Hemolytic effect,highly resistant to Ozone and UV rays,extreme resistant to the acid and base and heat,anti-aging,antioxidant,long service time,working temperature range from -51℃-132℃	⩾1000h

Note:The above test data is at a speed of 400r/min continuous operation of 4 rotors,room temperature is 20 degrees Celsius pure water under pressure until the tubing until the occurrence of rips measured.Pump head speed is different,pump tube life is also different.In general,the slower for pump head,the longer for pump life.The actual service life is affected by medium, conditions,temperature and humidity,voltage and other factors.The test data is for reference.

2. Pump tube model selection

KCM- S 16 8
↑

According to the flow rate(ml/min) to choose the appopriate diameter code(mm)

Code			14	19	16	40	25
ID*OD（mm）			1.6*4.8	2.4*5.6	3.2*6.4	4.0*7.2	4.8*8.0
Materials			B	B	B	S	B
Flow rate（ml/min）	24V @550RPM	3 Rollers	70	175	300	480	670
		6 Rollers	60	130	230	300	375
	12V @350RPM	3 Rollers	44	111	190	305	/
		6 Rollers	38	82	146	190	/

Working conditions:Ambient temperature: 0°C-40°C
Relative humidity: <80%

Note:The above flow parameters at 20 degrees Celsius standard pressure without water pressure measured in condition of new tube aging in 30 minutes,the speed at 24V@450RPM/12V@350RPM,the actual according to different media,the outlet pressure is different,the DC motor speed error,the flow there will be some error,the data for reference.

Stepper motor is different from the current, the same current conditions: low voltage, high number of rotors, crude pump tube can not get higher speed, there will be the possibility of motor blockage stall, and otherwise,there is no problem.

Example 1: 12V voltage, 8 rotors, 3 * 5BPT tube can only be used below 400 rpm, otherwise there will be the possibility of motor blockage stall,.

Example 2: 24V voltage, 4 rotors, 1 * 3BPT can work when the speed is above 500RPM.

Pump life and speed are closely related, the higher the speed, the shorter pump life, therefore, in the case of high accuracy, try to choose a large pump, low speed conditions, the recommended pump speed is below 400RPM.

3.Pump connector form

Number	Tube connector code	Tube diameter (ID)	Recommended diameter(ID)
1	25.20.0006	0.6≤φ≤2.0	Φ1.8～φ2.4
2	25.20.0008	2.0<φ≤3.2	Φ2.5～φ3.2
3	25.20.0010	3.2<φ≤4.0	Φ3.3～φ4.0

Dimensions

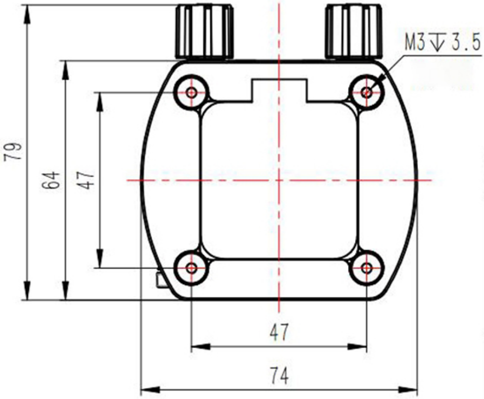

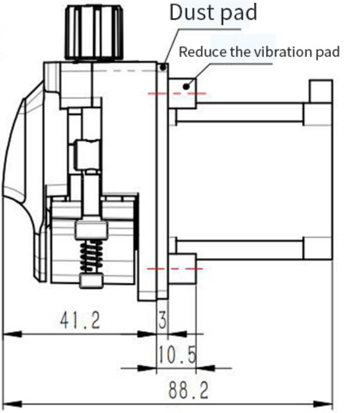

Recommended mounting plate opening size

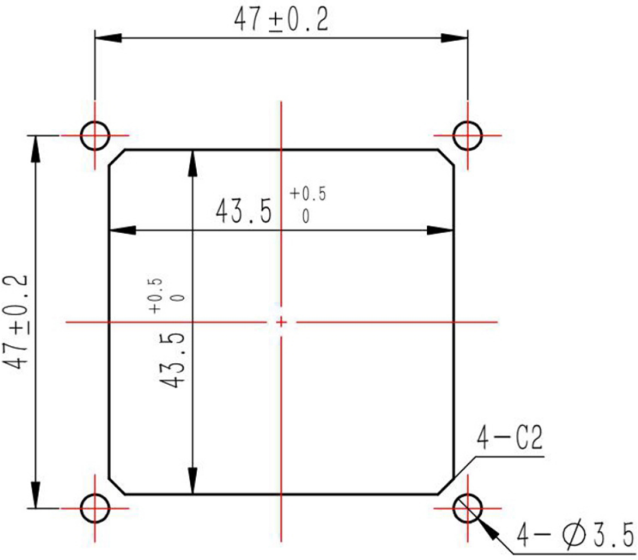

Recommended panel opening size

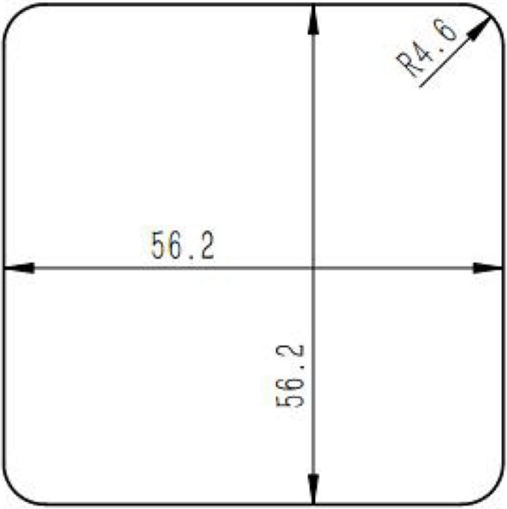

Stepper motor wiring diagram

Step angle: 1.8° Two phases: four wires Current: 1.2A Wiring length: 400mm

Recommended drive and controller

If the user does not have equipment to drive the stepper motor, it is recommended to use the KMD-M42S driver and the 2802 controller of kamoer. Please refer to the respective manual for the function details of the two products.

Optional bracket

The pump can be equipped with a bracket for converting the straight-through mode to the L-type installation. There are three options:

Bracket type C: cushion under the cushion

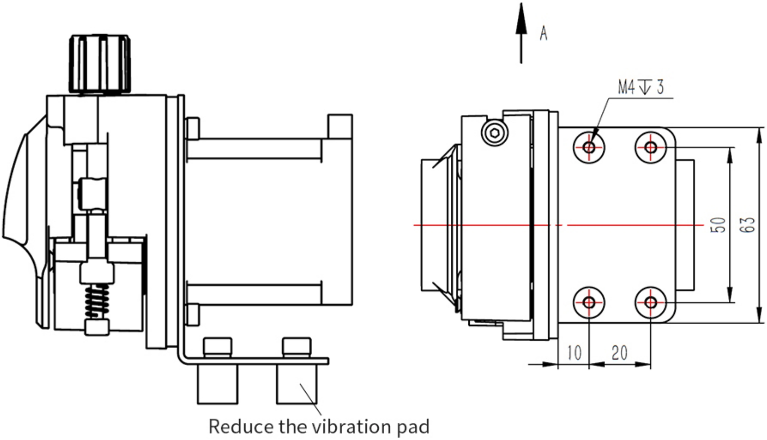

Stand Type B: No shock pad

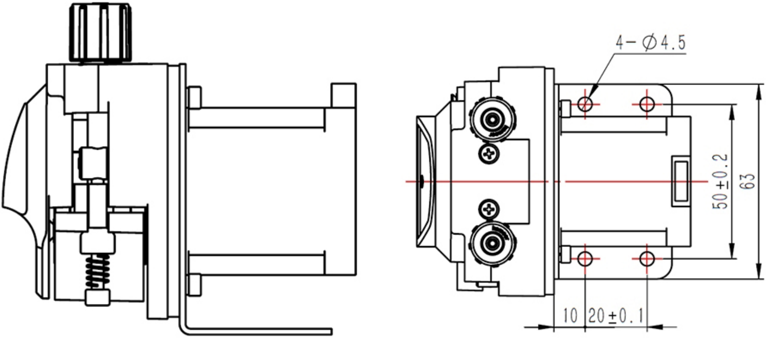

Bracket type A: cushion is mounted on the pump

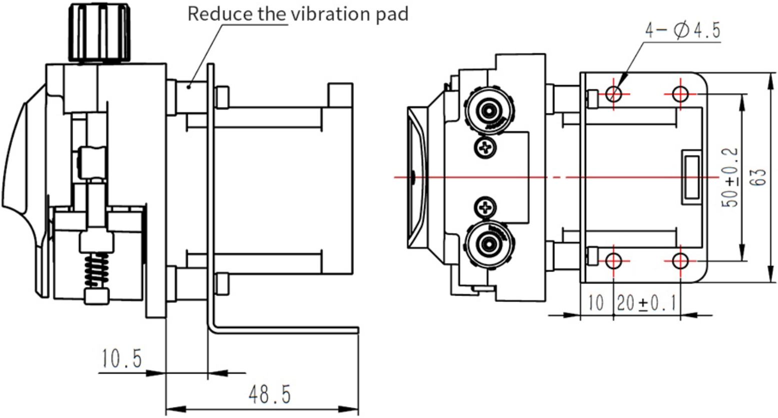

The devil's in the detail. Details highlight the quality

Quality details see

Accurate and reliable fluid transfer

01.Good performance

Suitable for viscous, non-viscous liquid transport

02.Look good

Structure introduction, exquisite appearance

03.Multiple pump tubes

Available in a variety of pump tube sizes

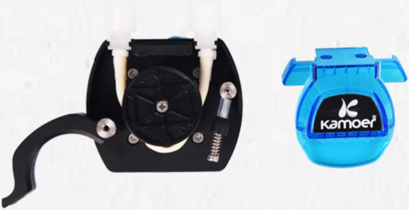

04.Stepper motor

Stepper motor for higher precision